SoRoTo®
HARD WORKING SINCE 1986

MANUAL
BELT CONVEYORS

CE
GB-29.11.18

2.0 M

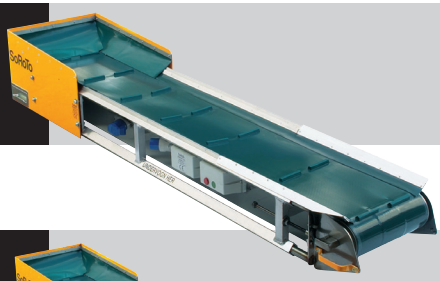

WEIGHT
45 kg

3.3 M

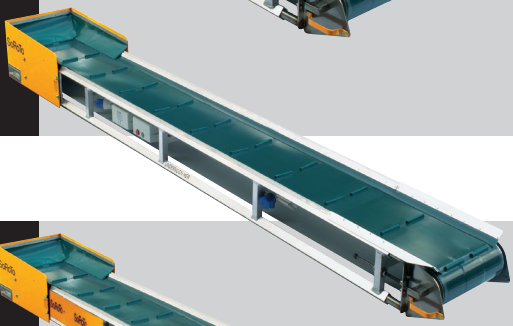

WEIGHT
65 kg

4.5 M

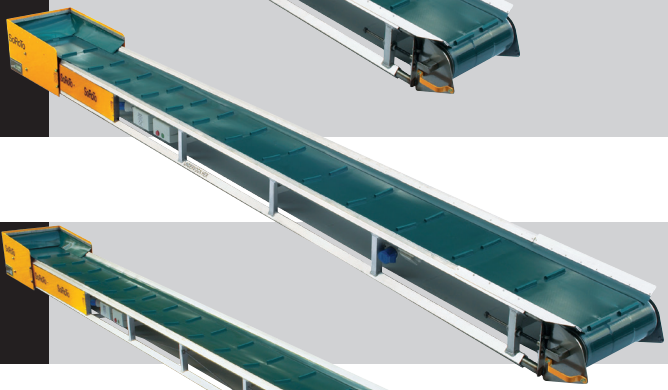

WEIGHT
85 kg

6.0 M

WEIGHT
100 kg

8.0 M

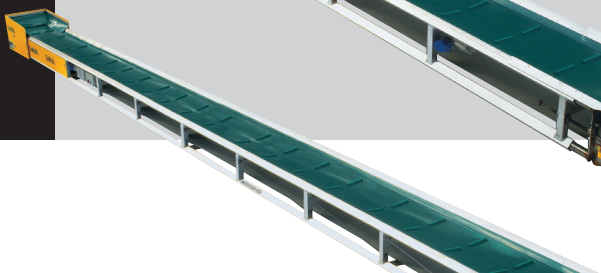

WEGHT
120 kg

English

TABLE OF CONTENTS

SoRoTo 2.0 / 3.3 / 4.5 / 6.0 / 8.0 M ..... p. 3
- Usage ..... p. 3
- Before use ..... p. 3
- Product description ..... p 3
- Technical data ..... p. 4
- Safety regulations ..... p. 4
- General safety regulations ..... p. 5
- Starting and using the belt conveyor ..... p. 5
- Maintenance and cleaning ..... p. 7
- Features ..... p. 8
- Moving the belt conveyors around ..... p. 9
- Environmental protection ..... p. 9
- Technical support ..... p. 9
- Contact details ..... p. 9
- Spare part list ..... p. 10
- Exploded drawings ..... p. 12
- Illustration – steel- and reinforcement tray ..... p. 14

EU Declaration of Conformity ..... p. 16

THE MANUAL APPLIES TO

SoRoTo Belt Conveyors – 2.0 / 3.3 / 4.5 / 6.0 / 8.0 M

USAGE

The SoRoTo Belt Conveyors are available in five different lengths, and are suitable for moving all sorts of building materials. A single belt conveyor can move up to 322 ton a day.

BEFORE USE

Please read the safety regulations, and always remember to check the PVC belt for wear, tear and breakage before use.

Note these symbols throughout the manual - indicating as follows,

⚠ Risk of injuries or damage to the machine, if the instructions are not followed.

⚠ Risk of electrical shock.

PRODUCT DESCRIPTION

The SoRoTo Belt Conveyor is delivered with the following equipment as standard,

- Aluminum feeder
- PVC belt with 10 mm carriers
- Undercarriage with two wheels – easy to click on and off

Additional equipment can be ordered,

- Larger aluminum feeder for loading with wheelbarrow
- PVC belts wo/carriers – for transporting wet mortar, concrete etc.
- PVC belts with 30 mm carriers – for transporting stony materials
- Reinforced PVC belts with a higher tensile strength
- Motor designed for operating in extreme low temperatures
- Truck pockets

TECHNICAL DATA

SoRoTo Belt Conveyor	2 m	3.3 m	4.5 m	6 m	8 m
Motor	230V/0.50 kW	230V/0.50 kW	230V/0.50 kW	230V/0.55 kW	230V/0.55 kW
Frequency	50 Hz	50 Hz	50 Hz	50 Hz	50 Hz
Belt speed	32 cm/sec.	32 cm/sec.	32 cm/sec.	32 cm/sec.	32 cm/sec.
Length	2.2 m	3.3 m	4.5 m	6.2 m	8.1 m
Conveyor width	48 cm	48 cm	48 cm	48 cm	48 cm
PVC belt width	35 cm	35 cm	35 cm	35 cm	35 cm
Alu. frame, height	23 cm	23 cm	23 cm	23 cm	23 cm
Feeder, height	39 cm	39 cm	39 cm	39 cm	39 cm
Max. lifting height*	30°	30°	30°	30°	30°
Weight incl. undercarr.	45 kg	65 kg	85 kg	100 kg	120 kg

(*The max. lifting height depends on the choice of material and the no. of kilos to be moved)

SAFETY REGULATIONS

Please keep this manual in a safe place, so the information within it is always accessible. If the SoRoTo Belt Conveyor is handed over to another person, please make sure the manual is included.

The manual can also be downloaded from our website www.soroto.dk/en

The manufacturer is not liable for any legal claims in case of injuries or damages to the machine, which has occurred because of failure to follow safety regulations.

Safe operation of the machine is only possible, when this manual has been read thoroughly. Please follow the instructions at all times.

To avoid electrical shock and damages

- Always use the correct current. The power supply must correspond with the information described within this manual (see technical data).
- Always check the cable and plug before use. If the cable is damaged it must to be replaced by either the manufacturer or an authorized electrician.
- Always make sure the belt conveyor is turned off before the cable is connected to the power supply.
- Always make sure that the emergency stop works before using the belt conveyor.

⚠ GENERAL SAFETY REGULATIONS

- Always keep a safe distance to children and bystanders, while operating the machine.
- The belt conveyor may only be used by trained personnel.
- The belt conveyor may only be used for moving building materials.
- Maximum three belt conveyors can be interconnected via the supplied power outlet.
- Never stop the belt conveyor before all of the materials have been unloaded.

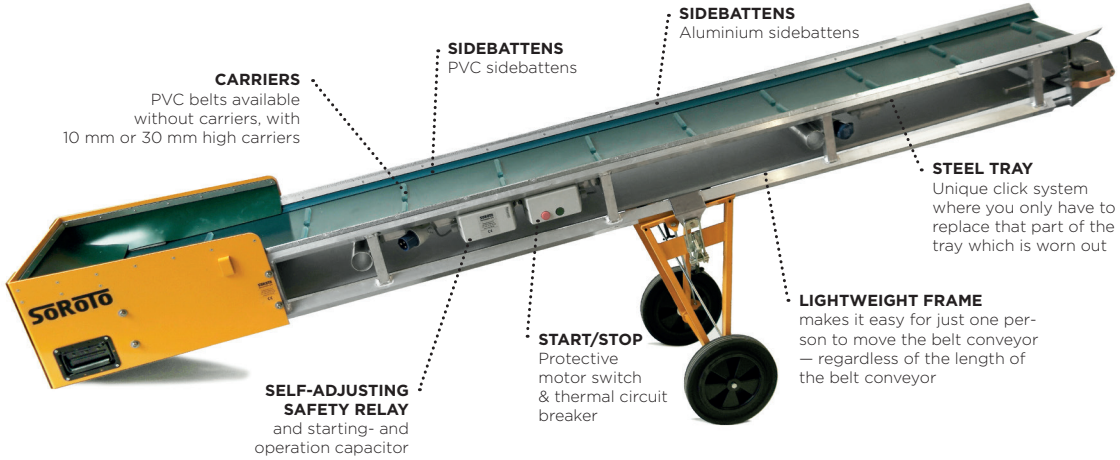

STARTING AND USING THE BELT CONVEYOR

Make sure the data described on the rate plate correspond with the accessible power supply. The SoRoTo Belt Conveyor may be connected to 220V/240V.

Starting and stopping the belt conveyor

The belt conveyor is operated via a mounted motor switch with on/off. Furthermore the motor switch is equipped with an O-discharger, which switches off the machine in case of power failure.

The emergency stop is mounted on the opposite side of the motor switch. Activating the emergency stop is without risk to personnel or the belt conveyor. After an emergency stop, the belt conveyor must to be restarted manually.

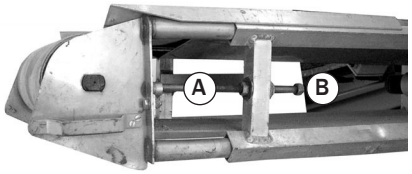

⚠ When interconnecting several belt conveyors, always observe that no crushing hazard is present. Always make sure that there is minimum 120 mm between the belt conveyors. Always remove the plug from the power supply before mounting and detaching the PVC belt!

Mounting of a new PVC belt

1. Remove the feeder.
2. The PVC belt is detached by loosening the locknut (A).
3. Hold nut (B) while the threaded rod is turned anti-clockwise.
4. Push the motor and the roller fittings back with a rubber hammer.
5. Place the frame on its side with the power box at the top end.
6. Remove the under sledges.
7. Then remove the PVC belt.
8. Before mounting the new PVC belt, please clean the steel tray and side battens.
9. Then mount the new PVC belt.
10. Remount the under sledges. Lay down the belt conveyor again.

Adjustment of the PVC belt

1. Before adjusting the PVC belt, please place the belt conveyor on chocks to avoid the frame from getting twisted.
2. Tighten the PVC belt by holding nut B, while turning the threaded rod clockwise. Tighten the PVC belt as much as possible, so it does not skid on the back roller when this is fully loaded.
3. Adjust the PVC belt so it runs in the middle of the back roller. Adjust it by turning the threaded rod in the roller end.
4. Tighten the locknuts in both ends of the belt conveyor.
5. Turn on the belt conveyor to observe if the PVC belt runs correctly. Please observe if the PVC belt runs straight in the steel tray.
6. If the PVC belt runs askew, measure with a ruler if the motor fittings in both ends has the same distance to the frame.
7. Then refine the adjustment of the PVC belt in the roller end of the belt conveyor. Just so the PVC belt is loosened a little in both ends of the steel tray.
8. If the PVC belt runs askew in the end where the feeder is located, adjust one of the adjustment screws carefully. Just half a turn could suffice. After the adjustment, please allow the belt conveyor to run for at least two minutes, to see if the PVC belt aligns.
9. Before remounting the feeder, please note if the PVC belt runs in a straight line at the back roller and at the motor roller.

⚠ Allow the belt conveyor to run for at least 30 minutes, before putting the machine to use again.

MAINTENANCE AND CLEANING

For a longer durability, always check the SoRoTo Belt Conveyor before and after use.

Check the following,

- That the motor roller and the back roller are clean.
- That nothing is stuck at the back roller– such as stones or other objects
- That the PVC belt runs freely and with ease.
- That the PVC belt runs in a straight line. Please notice if the PVC belt runs straight in the steel tray. (If it runs askew, please follow the adjustment instructions above).
- That the PVC belt has no visible damages. (Cracks, small holes and damaged carriers must to be repaired before the belt conveyor is taken into use).
- That the PVC belt is located under the side battens.
- That the PVC side battens are intact. The battens must have a width of at least five cm. And they must be undamaged. In case of any damages, please replace the battens.

⚠ NOTE
When cleaning the belt conveyor NEVER expose the electrical parts to water.

Cleaning

For longer durability, please clean the machine frequently. For a proper cleaning of the SoRoTo Belt Conveyor, please follow this instruction,

1. Clean the PVC belt – e.g. with a pressure washer.
2. First dismount the feeder and observe if any stones, dirt e.g. are stuck to the back roller or the back scraper. Clean if necessary.
3. Make sure the PVC on the feeder is not worn (out). Replace if necessary.
4. Inspect the complete belt conveyor. Remove all foreign objects.
5. If necessary dismount and clean the PVC belt (see point 1-4).
6. After cleaning the belt conveyor, remount the feeder. Now your belt conveyor is ready for use again.

INCLUDING
Standard feeder

INCLUDING
Undercarriage with two wheels and click on/off

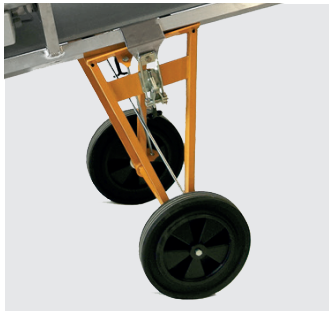

INCLUDING
PVC belt with 10 mm high carriers

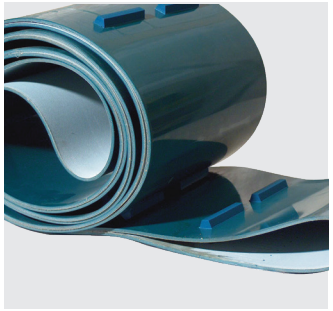

INCLUDING
Self-cleaning modular plates = low maintenance

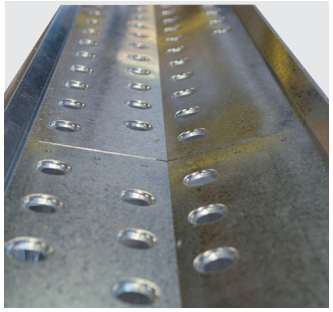

OPTIONAL
Motors for extremely cold temperatures

OPTIONAL
Extra wide feeder for wheelbarrow

MOVING THE BELT CONVEYOR AROUND

When moving the belt conveyor from one place to another, please attach the undercarriage to the frame – approx. in the middle. Then lift the belt conveyor at the end. Make sure the belt conveyor is balanced, and it is easily moved around.

ENVIRONMENTAL PROTECTION

- Worn-out PVC belts must be returned to the collection facilities provided for recycling or destruction.
- Environmentally hazardous waste must always be returned to the collection facilities provided for recycling or destruction.
- Please take care of the environment.

TECHNICAL SUPPORT / WAREHOUSE
Fabriksparken 11
DK-2600 Glostrup
Tel. +45 3672 7800
teknik@soroto.dk

SALES / ADMIN
Fabriksparken 13
DK-2600 Glostrup
Tel. +45 3672 7500
soroto@soroto.dk

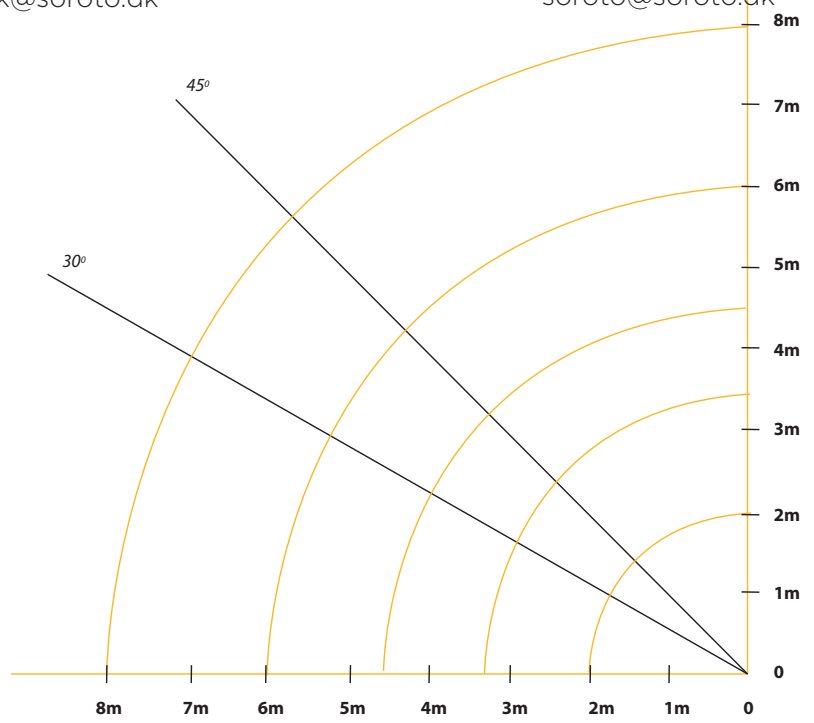

Spare Part List for belt conveyor 110V is available online
www.soroto.dk/en

SPARE PART LIST - BELT CONVEYORS, **230V**

GB-31.10.18

POS.NO.	DESCRIPTION	ART. NO.
1	Alu. frame	XX01
	— Please specify: 2.0 M - 3.3 M - 4.5 M - 6.0 M - 8.0 M	
2	Steel tray, module 1	BC002-1**
	Steel tray, module 2	BC002-2**
	Reinforcement plate for steel tray*	BC002-3**
	— Please specify: 2.0 M - 3.3 M - 4.5 M - 6.0 M - 8.0 M	
3	PVC side batten (8 x 55 mm), for 1 side	XX03
	— Please specify: 2.0 M - 3.3 M - 4.5 M - 6.0 M - 8.0 M	
4	Alu. side batten, for 1 side	XX04
	— Please specify: 2.0 M - 3.3 M - 4.5 M - 6.0 M - 8.0 M	
4 P	Rivets for alu.side batten, for 1 side	XX04-P
	— Please specify: 2.0 M - 3.3 M - 4.5 M - 6.0 M - 8.0 M	
5 L	Motor fitting, left side, complete	BC005-L
5 R	Motor fitting, right side (elec. components), complete	BC005-R
6	Front scraper by the motor, complete	BC006
7	Handle for motor fitting, (1 pc.)	BC007
8 L	Roller fitting, left side	BC008-L
8 R	Roller fitting, right side	BC008-R
9	Back scraper, "Plough", complete	BC009
10 L	End piece, "Horn", left side	BC010-L
10 R	End piece, "Horn", right side	BC010-R
11	Threaded rod, 200 mm, Ø12, (2 pcs.)	BC011
12	Threaded rod, 120 mm, Ø12, (2 pcs.)	BC012
13	Leads protector, black PVC	BC013-P
	Leads protector, stainless steel	BC013-S
14	Power box with start/stop, complete, 230V	BC014
14 E	Power box with start/stop — without elec. components	BC014-E
15	Power box, P1, complete, 230V	BC015
15 E	Power box P1 — without elec. components	BC015-E
16	Protective motor switch, model K3, 230V	BC016
16 G	Green button for protective motor switch, model K3, 230V	BC016-G
17	Thermal circuit relay, model K3, 230V	BC017
18	Self-adjusting relay, new model	BC018
	Starter switch = BC016 + BC017 + BC018	
19 O	Operating capacitor 25 µF	BC019-0
19 S	Starting capacitor 63 µF	BC019-S
20	Lead, cable with 3 leads	XX20
	— Please specify: 2.0 M - 3.3 M - 4.5 M - 6.0 M - 8.0 M	
20 A	Lead, cable with 7 leads	XX20A
	— Please specify: 2.0 M - 3.3 M - 4.5 M - 6.0 M - 8.0 M	
21	CE adaptor, CE-16, w/plastic nuts M20	BC021
22	Rubber seal (leading-in)	BC022

POS.NO.	DESCRIPTION	ART. NO.
23	CE power intake, 230V	BC023
24	CE power outlet, 230V, by the motor	BC024
25	Connector box, by the motor	BC025
26	Motor	XX26
	— Please specify: 2.0 M - 3.3 M - 4.5 M - 6.0 M - 8.0 M	
27	Alu. back roller	BC027
28	PVC belt	XX28
	— Please specify: 2.0 M - 3.3 M - 4.5 M - 6.0 M - 8.0 M	
29	Side plate, (1 pc.)	BC029
30	Feeder box, standard, complete	BC030
31	Handle for feeder box, new model, (1 pc.)	BC031
32	PVC for feeder box, complete set (green)	BC032
33	Rubber for feeder box, complete set (black)	BC033
34	Separate side-PVC for feeder box, (2 pcs. — 1 x left, 1 x right)	BC034
35	Separate back-PVC for feeder box, (1 pc.)	BC035
36	Alu. batten for side-PVC, feeder box, 64 cm, (1 pc.)	BC036
37	Alu. batten for end-PVC, feeder box, 44 cm, (1 pc.)	BC037-B
	Alu. batten for rubber, feeder box, 30 cm, (1 pc.)	BC037-I
38	Threaded rod, zinc, 6 x 750 mm, (1 pc.) 6.0 M (6 pcs.), 8.0 M (12 pcs.)	BC038
39	Undersledge, complete 4.5 M (1 pc.), 6.0 M (2 pcs.), 8.0 M (3 pcs.)	BC039
39 P	Separate runner for undersledge 4.5 M (1 pc.), 6.0 M (2 pcs.), 8.0 M (3 pcs.)	BC039-P
41	Undercarriage, complete	BC041
41 C2	Handles for undercarriage, (2 pcs.)	BC041-C2
41 W	Wheel for undercarriage, Ø300 mm, (1 pc.)	BC041-W
41 WB	Bolt and washer for wheel Ø300 mm, set for 1 wheel	BC041-WB
42	Safety plate, by the motor	BC042
43	Feed hopper for wheelbarrow	BC043*
44	Side controller, complete set incl. alu. bridge w/sliding profiles	BC044
44 P	Sliding profiles, "Pehd", (2 pcs.)	BC044-P
55	Emergency switch, complete	BC055
66	Repair set for PVC belt: Glue and hardener, PVC patch 100 x 100 mm (1 pc.), PVC patch 160 x160 mm (1 pc.), PVC patch Ø120 mm (1 pc.), standard carriers — 10 mm high (1 m.) PVC line (1 m.)	BC066
75	Truck pockets (2 pcs.)	BC075*
99	Alu. frame incl. steel trays, reinforc. plate and side battens — Please specify: 2.0 M - 3.3 M - 4.5 M - 6.0 M - 8.0 M	BC099

* OPTIONAL
** Please see exploded drawing for further details

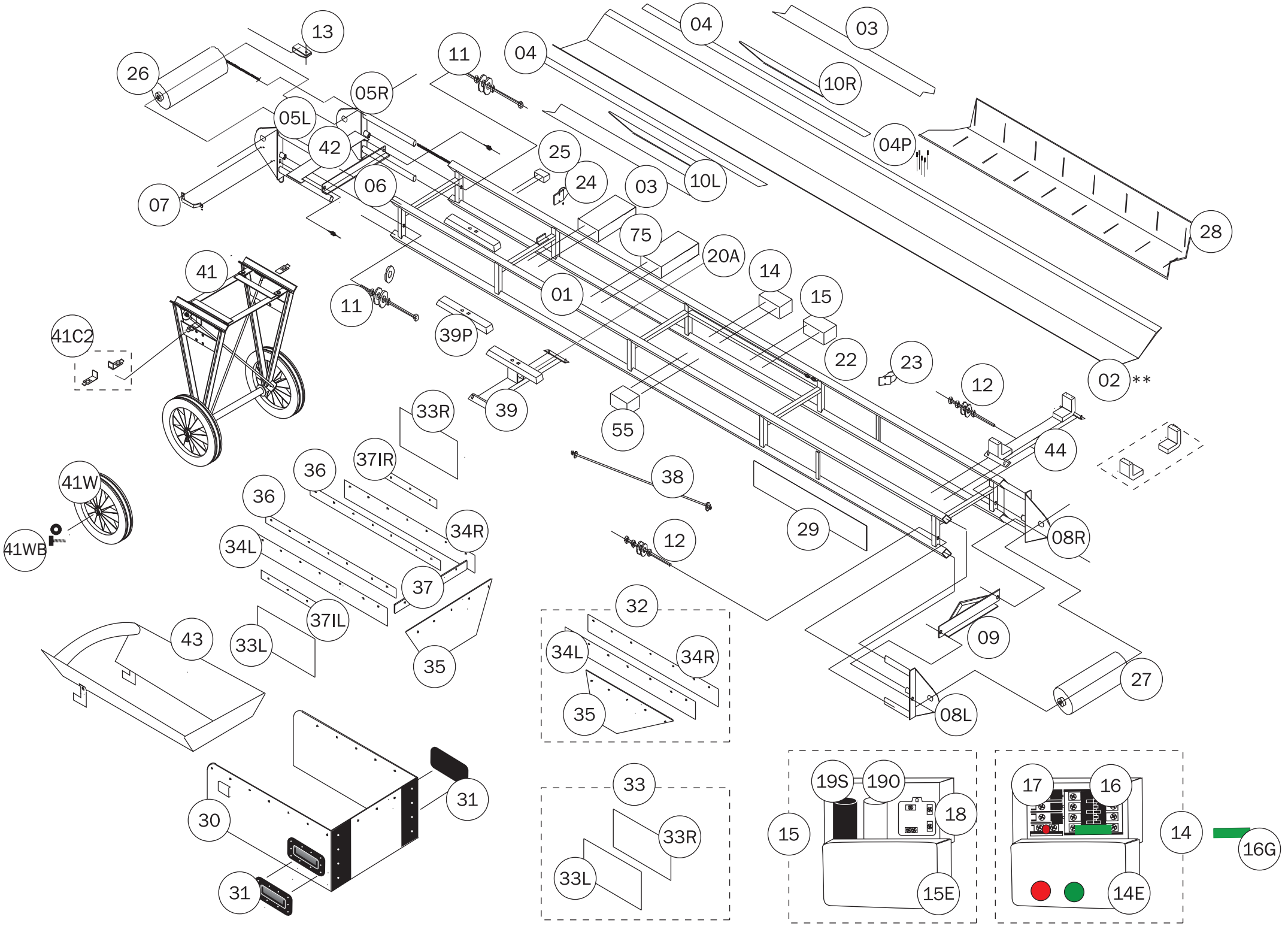

13
26
11
04
04
03
10R
05R
05L
42
25
24
03
10L
04P
07
06
75
20A
28
41
14
15
01
11
39P
41C2
22
23
12
02 **
39
33R
55
44
37IR
36
38
41W
36
34R
29
08R
41WB
34L
12
37
37IL
32
09
43
33L
34L
34R
35
27
35
08L
33
19S
19O
17
16
31
30
18
15
14
16G
33R
31
33L
15E
14E

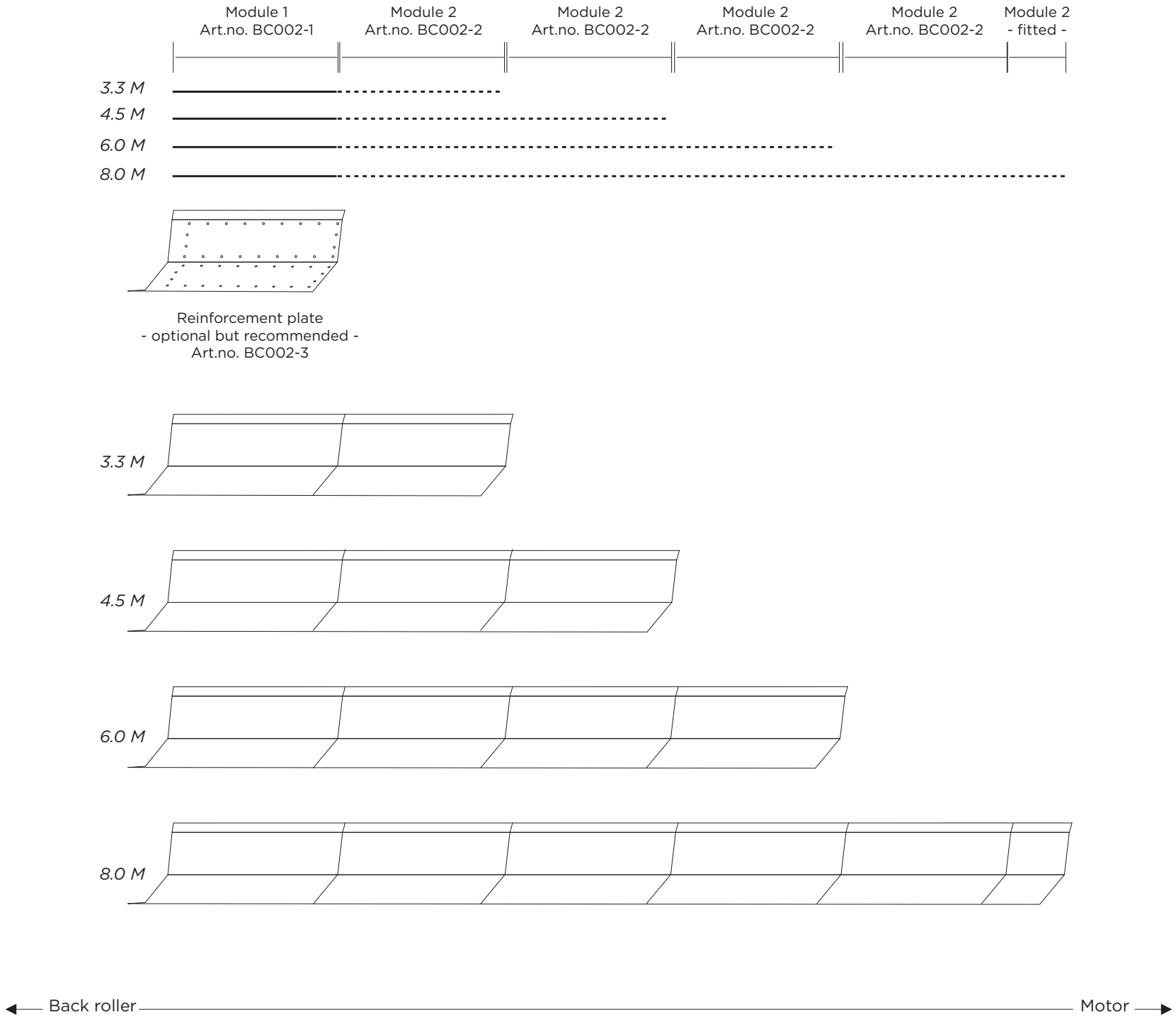
Module 1
Art.no. BC002-1
Module 2
Art.no. BC002-2
Module 2
Art.no. BC002-2
Module 2
Art.no. BC002-2
Module 2
Art.no. BC002-2
Module 2
- fitted -
3.3 M
4.5 M
6.0 M
8.0 M
Reinforcement plate
- optional but recommended -
Art.no. BC002-3
3.3 M
4.5 M
6.0 M
8.0 M
Back roller
Motor

EU DECLARATION OF CONFORMITY

ANNEX II.A OF THE MACHINERY DIRECTIVE

Manufacturer:	SoRoTo A/S
Address:	Fabriksparken 11-13, 2600 Glostrup, DENMARK
Product:	Belt Conveyors
Model:	2.0 M — 3.3 M — 4.5 M — 6.0 M — 8.0 M
Manufactured:	From 2015 and onwards

We hereby declare that the SoRoTo Belt Conveyors are manufactured in conformity with the stipulation containted in COUNCIL DIRECTIVE No. 2006/42/EC on the approximation of the laws of member states on machine, including subsequent modifications, with special regard to Annex I of the directive on important safety and health requirements in connection with the design and manufacture of machines.

Furthermore, we declare that the SoRoTo Belt Conveyors are manufactured in conformity with the following harmonised standard,

EN 10151

15.03.2017
Glostrup, DENMARK

Hans Terney Rasmussen
CEO

Original